DACIA SANDERO

CHALLENGE CUP

Motorsport Ireland

YOKOHAMA

MURRAY MOTORSPORT.COM

TECHNICAL REGULATIONS

Updated & Published February 13th 2025

CONTENTS ***PAGE***

Table of Contents 1

1/ Introduction to Class 2

2/ Vehicle Requirements ..... 2 - 3

3/ Body shell ..... 3 - 4

4/ Exterior 4

5/ Interior 4

6/ Engine ..... 5 - 6

7/ Engine Ancillary Equipment ..... 6 - 7

8/ Transmission ..... 7 - 8

9/ Suspension 8

10/ Wheels ..... 8 - 9

11/ Tyres ..... 9 - 10

12/ Brakes 10

13/ Electrics 11

14/ Fuel ..... 11 - 12

15/ Roll Cage 13

16/ Compliance 14

17/ Transmission Technical Information ..... 15 - 22

18/ Dacia Sandero Rally Kit List ..... 23 - 24

Technical Specifications ..... 25 - 28

Championship Contacts 29

DACIA SANDERO CHALLENGE CUP

Welcome to the DACIA SANDERO CHALLENGE, Motorsport Ireland's newest rally class. This is strictly a production class, with little changes to the 1.2 litre Dacia Sandero. This class is intended to be an affordable and enjoyable class, where all cars are equal. This is an ideal entry level class for newcomers to rallying, as well as an affordable class for the clubman. Cars in this class will run in Class 23 as per Appendix 29.1 of the current Motorsport Ireland Yearbook.

The following are the Technical Regulations for the Dacia Sandero Challenge Cup.

1/ INTRODUCTION

The Dacia Sandero Challenge is a one make/one model , 2 wheel drive class promoted by Motorsport Ireland. The car that must be used of choice is **the Dacia Sandero 1.2L, 16v 75HP, Manual Petrol, Engine model D4F 732 and gearbox model JH3/359, JH3/090, JH3-073, JH3-081 and JH3-387**. Only cars that were on sale in Ireland and the U.K by the manufacturer, during the years 2013 to 2017, are permitted to be used. **Cars must only be built using The Dacia Sandero Rally Kit which must be purchased from our nominated supplier, Murray Motorsport Ltd.** Competitors are free to prepare their own vehicles as they wish, provided they comply with all technical regulations, but must use **The Dacia Sandero Rally Kit** purchased from Murray Motorsport Ltd.

Murray Motorsport Ltd. Unit 9-11 Beechlawn Industrial Complex, Greenhills Road, Dublin D12VY54

shop@murraymotorsport.com

Phone – 353 1 4500 555

2/ VEHICLE REQUIREMENTS

2.1/ All vehicles must comply with the MI Regulations which are found in the current edition of the MI Yearbook. The vehicle must be un-modified, with the exception of those modifications allowed on safety grounds and listed in Appendix 2, in the current edition of the MI Yearbook and in these Technical Regulations. No component, including engine, engine management system and transmission part, may be removed, physically modified or exchanged, for any non-standard part, *except* for those parts supplied in The Dacia Sandero Rally Kit. All parts should be available or have been available in Ireland for the model and year of that car.

2.2/ Where regulations specify the use of standard parts, a competitor may use parts from an alternative supplier, as long as it is not of a higher specification than the original part.

2.3/ Parts may be replaced, but only using procedures or processes as specified in the vehicle manufacturer's workshop manual.

2.4/ Any drive components, i.e. engine, gearbox etc, which are detected during an event not to be of identical specifications to the original Dacia Part specification or as defined in these Technical Regulations, will lead to **disqualification** from an event.

3/ BODYSHELL

3.1/ It is only permitted to use body shell or body panels from the same model as it was released by the manufacturer.

3.2/ Body shell, (including doors, bonnet, and boot door), must retain the original manufacturers material, minimum thickness, shape, structure and outline. It is not permitted to lighten the vehicle shell by removing or cutting away any parts or components, other than those listed in Articles 4.3, 4.4, 5.1, 5.2, 5.6, 6.1, and 10.2.

3.3/ The body shell can only be strengthened around the Roll Cage mounting points using the kit supplied. Seam Welding or any extra shell strengthening is not permitted.

3.4/ Rear seat brackets must be removed to allow for fitting of roll cage, (as shown in Figure 1).

Figure 1

3.5/ Wheel arches may be folded in to avoid contact with the tyres.

3.6/ The fitting of under body guards and protection plates is compulsory as supplied in kit.

3.7/ Roof mounted vents / roof pods are permitted. These are not included in the kit but are available from Murray Motorsport for purchase if a competitor wishes to use said item.

3.8/ Mounting of supports on the bodywork for the installation of jacking points for axle stands is allowed.

3.9/ The minimum weight of the car (including crew) fuel is 1210kg.

4/ EXTERIOR

4.1/ Original equipment Aerofoils, spoilers, wings, wheel arch extensions and body style devices may be retained, once a competitor can show where the equipment is or was available from the manufacturer's catalogue of accessories for that make and model of car.

4.2/ Normal locking devices must be removed or rendered inoperative from the bonnet and boot lid and then be replaced with at least two additional fasteners for the front and rear bonnet and boot lid, which must be able to be operated externally on the car.

4.3/ For safety purposes and ease of access by Rescue Units, self-locking door mechanisms must be removed to allow this.

4.4/ Glass sunroofs are not permitted and must be replaced by a suitable plate, as per Appendix 2 of the current Motorsport Ireland Yearbook.

4.5/ Standard wing and door mirrors must be retained.

4.6/ All heat shields, (engine bay and under floor), must be retained, however, detachable under body plates, engine component trays and wheel arch liners may be removed.

4.7/ The fitting of lamp pods to body panels is permitted .

5/ INTERIOR

5.1/ Rear seats, belts, floor coverings, roof cloths, rear parcel shelf, detachable boot liner covers, sound deadening material, radios, may be removed or replaced.

5.2/ Safety airbags must be removed completely. Once removed, the remaining hole must be filled or covered in.

5.3/ Steering wheel as supplied in your Dacia Sandero Rally Kit.

5.4/ Electric windows to manual wind up/down mechanism or manual wind up/down mechanism to Electric windows swaps are permitted.

5.5/ Additional instruments, switches and dials are permitted, but the standard equipment supplied by the manufacturer, must be retained in the car, in its proper location and housing.

5.6/ Door trims must be retained, and trimmed to fit around Roll Cage Door Bars.

6/ ENGINE

6.1/ Cosmetic detachable engine covers, (BUT NOT HEAT SHIELDS), and bonnet sound deadening materials, may be removed.

6.2/ Air filters, filter housing assembly and related piping must be retained and meet original Dacia specifications.

6.3/ The engine must be a standard production engine for the make and model of car, including induction and engine management system. **Only engine type with standard induction and a cylinder capacity of 1149cc, (75HP, 1.2L), 16v, 4 cylinder Petrol is allowed, Model D4F 732.**

6.4/ Re-boring for the purpose of re-lining the engine block **to the original cylinder capacity** is permitted. Skimming the block is not permitted. Head skimming is permitted, but only for the purposes of head gasket replacement. Compression Rate of 9.8 max. allowable. No modification to the cylinder head is allowed, (**port/polish and valve enlargement is strictly forbidden). Camshafts must remain as standard with no alternations allowed. Camshaft pulley must remain as standard with no flywheel lightning allowed.** Valve seats must not be altered in any way from what was original at time of manufacture by Dacia.

Bore 69mm Stroke 76.8mm Displacement 287.18cm^3

6.5/ Internal baffles may be fitted to the sump and sump oil pick up pipe may be modified.

6.6/ Standard exhaust manifold and exhaust system must be retained . Alternative supplier parts of a similar shape and design may be used for repair purposes.

6.7/ As this model is legally fitted with a catalytic converter, this must be retained in its original location and remain functional. Alternative supplier parts of a similar shape and design, may be used for repair purposes.

6.8/ ENGINES WILL BE CHECKED AND SEALED BEFORE OBTAINING A MOTORSPORT IRELAND COMPETITION LOGBOOK, (as per Figure 2), by a Motorsport Ireland Scrutineer and seals must only be broken or removed with the express permission of the Championship Scrutineer/Manager. Components must be re-sealed by a MI Scrutineer before competing again. Where specifications are applicable, Engine head bolts and sump bolts **MUST be pre-drilled to 2mm min. to facilitate wire sealing. (Ref Appendix 2 Motorsport Ireland Yearbook)**

ENGINE SEALING

The holes must be made in the screws indicated in the photograph, these screws are located on the left side of the motor. The holes will be of sufficient diameter +- 2mm, to allow the passage of the sealing wire.

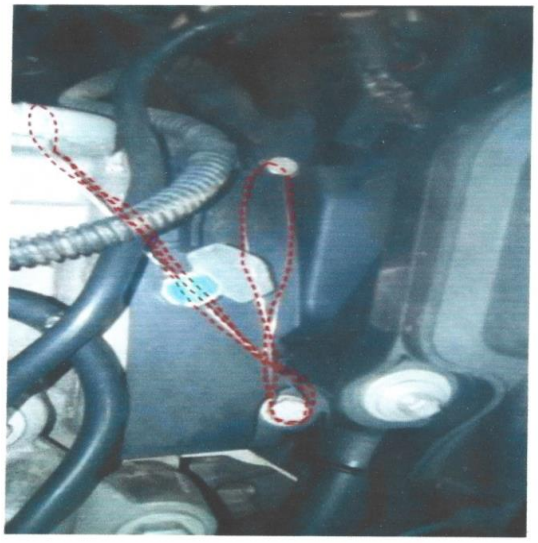

Figure 2

7/ ENGINE ANCILLARY EQUIPMENT

7.1/ The standard fuel pump and fuel filters must remain in their original location.

7.2/ An oil cooler may be fitted. This must be contained within the profile of the body, grille and bumper area.

7.3/ It is not permitted to disable, disconnect or remove the exhaust gas recycling EGR valve where fitted and this will be checked and sealed before obtaining an MI competition log book.

7.4/ Electric *or* Hydraulic power steering are as fitted by Dacia as standard, is allowed.

7.5/ The ECU must be that as listed for the make and model of the car. The ECU will be adjusted to affect maximum, optimum engine performance and removal of the immobilisation feature. The ECU must be supplied to the Championship Scrutineer for mapping prior to obtaining the competition logbook for your car. One mapped, the ECU will be sealed by the Championship Scrutineer and returned to the competitor. The cost of this process is to be borne by each competitor. The fitting of "Piggy-Back" or additional ECUs is forbidden. **ECUs MUST BE SEALED** (as in Figure 3 and Figure 4), at time of obtaining an MI competition log book and can only be broken or removed with the express permission of the Championship Scrutineer/Manager. If the seal is broken for any reason, it must be checked and re-sealed before competing again by an MI Scrutineer. **At any event**, **ECUs may be swapped at scrutiny between competitors cars in the same class, by the scrutineers, using a lottery system of car competition numbers.**

ECU SEALING

Figure 3

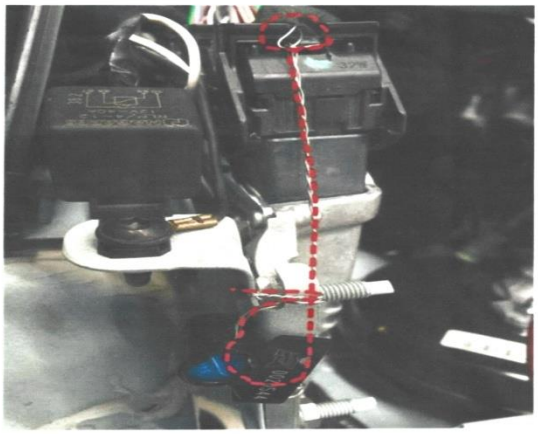

Figure 4

8/ TRANSMISSION

8.1/ Standard gearbox must be used **(manual gearbox with 5 forward gears and 1 reverse, models JH3/359, JH3/090, JH3-073, JH3-081 or JH3-387)** with original gears and ratios. Switching gear ratios/final drives from another model car is not permitted. **Limited Slip Differentials are NOT permitted. Final drive ratio: 4.5/1**

8.2/ Sequential gear change kits and non-original straight cut gears are not permitted.

8.3/ Standard gear change lever and mounting must be retained.

8.4/ The clutch and pressure plate must remain as standard, as supplied in the car at time of manufacture. This may be either a hydraulic or cable clutch system fitted by the manufacturer. Replacement clutch kits must be of OEM specification. **Flywheel must remain as standard and lightening / modifying is strictly forbidden.**

8.5**/ GEARBOXES MUST BE SEALED** at time of obtaining a Motorsport Ireland competition log book (as in Figure 5) and if a seal is removed for any reason, it must be re-sealed by an MI Scrutineer before competing again, with the permission of the Championship /Manager.

Where specifications are applicable, transmission assembly stud/bolt heads must be pre-drilled to 2mm min., to facilitate wire sealing, reference Appendix 2 of the current Motorsport Ireland Yearbook.

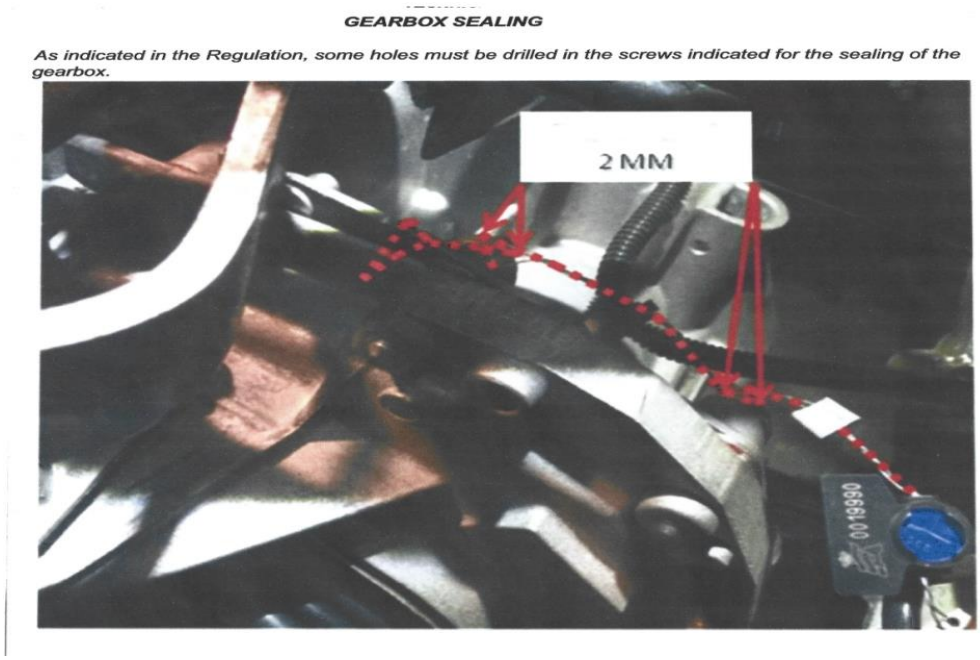

Figure 5

9/ SUSPENSION

9.1/ Suspension must be replaced by the Suspension System supplied in the Dacia Sandero Rally Kit which is mandatory to purchase when building your car. You must use the original mounting points and this will be checked by an MI Scrutineer before you can obtain your competition log book.

9.2 / Anti Roll Bars must be retained as per manufacturers specifications, and cannot be modified in any way.

9.3 / Up rated suspension bushes are permitted, and are supplied in your Dacia Sandero Rally Kit but non-elastic, rose joints or similar metallic joints are not permitted.

10/ WHEELS

10.1/ Wheels must be one of the standard variants as supplied by Dacia (listed on Page 26) and must be the same dimensions as fitted by Dacia, 6J x15.

10.2/ Wheel Trims, (including air impellors and extractors) MUST BE REMOVED.

10.3/ Wheel Bolts may be replaced with wheel Studs and nuts of the same size and Visa Versa.

10.4/ All cars must be fitted with mud flaps, made from flexible material of 4mm minimum thickness behind each wheel, extending to a minimum of 40mm each side of tyre thread and to within 80mm off the ground when car is unoccupied, as supplied in your Dacia Sandero Rally Kit.

11/ TYRES

11.1/ Hand Cutting, Skimming or any other modifications or the use of chemicals to alter the properties of the tyre and use of tyre blankets **ARE STRICTLY FORBIDDEN.**

You may only use the following Control Tyre:

YOKOHAMA AD08RS 195/50R 15 (Figure 6 & 7)

Tyres must be purchased through Murray Motorsport

www.murraymotorsport.com

Figure 6

Figure 7

11.2/ Competitors may only have **A MAXIMUM of 3 NEW SPARE TYRES** at each event in the Championship, with the exception of each competitor's first event , where 5 new tyres may also be fitted to the car (4 on the car and 1 spare in the boot). All tyres will be marked at pre-event scrutiny by a scrutineer.

11.3/ The gap between the wheel rim and the tyre casing must only be filled with natural pressurised air. Chemicals or foams are strictly forbidden.

12/ BRAKES

12.1/ Brake pads must be the controlled pads and shoes listed in these Technical Regulations which are listed below and must be the same dimensions as the original parts. These are in your Dacia Sandero Rally Kit and replacements are available from our nominated supplier, Murray Motorsport. **No other brake pads are allowed.**

FRONT: **FRONT BRAKE PADS – EBC Bluestuff Compound**

REAR: **EBC (p/n 6612) or LPR (p/n 08150, 08630 or 09890)**

12.2/ Braided brake lines are compulsory and are supplied in your Dacia Sandero Rally Kit supplied from Murray Motorsport.

12.3/ The ABS module must be bypassed using the additional brake pipe, as supplied in your Dacia Sandero Rally Kit.

12.4/ Up rated proprietary brake proportioning valves must be fitted, (as supplied in your Dacia Sandero Rally Kit) and may only be situated in the engine compartment.

13/ ELECTRICS

13.1/ Battery type and size are free. Location within the engine bay must be standard. Extra retaining straps may be fitted.

14/ FUEL

14.1/ Only pump fuels available at commercial Filling stations may be used (max. 98 octane). No additives or fuel boosters are permitted and fuel samples may be taken and checked at any event in the championship by an appointed Motorsport Ireland Scrutineer.

14.2/ Fuel line must be rerouted from engine bay, through the bulkhead and through the car interior into the fuel tank in rear of car, for safety reasons. Fuel line kit supplied in your Dacia Sandero Rally Kit. Ref Figure 8 and 9.

Figure 8

Figure 9

15/ ROLLCAGE

15.1/ Rollcage as supplied with the Dacia Sandero Rally Kit which you purchased when building your car, must be the only cage fitted and must meet the rules as in Appendix 2 of the current Motorsport Ireland Yearbook. Cage is bolt in only and cage padding as supplied in your Dacia Sandero Rally Kit must be fitted as per Figure 10 and 11.

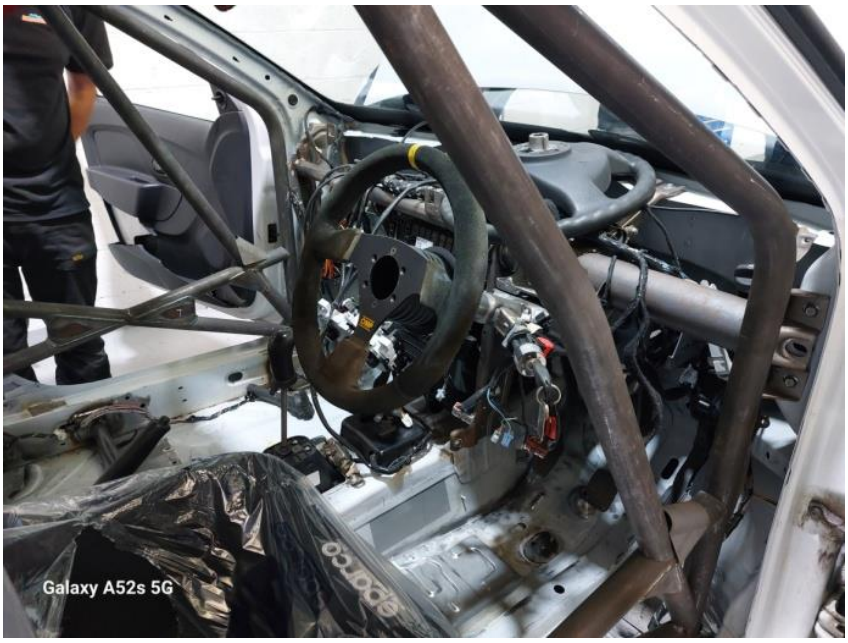

Figure 10

Figure 11

16/ COMPLIANCE

16.1/ Competitors are required to construct their vehicle so as to allow the Scrutineer to apply seals. Every engine, gearbox, ECU and parts with particular specifications, must have predrilled bolt heads, minimum 2mm, in accessible locations to ensure that they can be sealed. **Reference Appendix 2 of the current Motorsport Ireland Yearbook.**

Any seals or marks applied by a Scrutineer may only be removed or broken with express permission of the Championship Scrutineer/Manager. New seals or marks must then be applied by an Motorsport Ireland Scrutineer, appointed by the MI Technical Commission, who will ensure compliance with specification rules, before entry to competition is allowed again.

16.2/ Any additional or spare engines, gearboxes, ECUs or any other parts with specifications, can be checked, sealed and logged at any time throughout the season. Once adequate notice is given to the Championship Registrar/Manager, they will make contact with the appointed Championship Scrutineer to facilitate your request.

16.3/ Requests can be made to use other parts or modifications, if the standard part can be proven to be unreliable under competition conditions. The new part may only be used with written permission of the Championship Registrar/Manager. Permission will not be given if the new part is deemed to give an unfair advantage over other competitors. **Please contact the Championship Scrutineer/Manager if in doubt before undertaking any modifications to your vehicle.**

These regulations and all possible amendments, are written in terms of "WHAT IS ALLOWED". You must assume that in reading these Regulations and your interpretation of them, THAT ANYTHING THAT IS NOT EXPRESSEDLY AUTHORISED, IS FORBIDDEN, even if it does not impact on the performance of the car.

Murray Motorsport Ltd is the nominated Kit supplier of the Dacia Sandero Challenge Cup (shop@murraymotorsport.com) and will supply Dacia Sandero Rally Kit, the Yokohama control tyres and the Dacia Sandero Challenge Cup mandatory championship decals bundle for your car.

17/ TRANSMISSION TECHNICAL INFORMATION

Gearbox Assembly: Specifications

JH3 Manual Gearbox Ratios

Suffix	1st	2nd	3rd	4th	5th	Reverse
JH3/359	11/41	21/43	28/39	34/35	39/31	11/39
JH3/090	11/41	21/43	28/39	34/35	39/31	11/39
JH3/073	11/41	21/43	28/39	34/35	39/31	11/39
JH3/081	11/41	21/43	28/39	34/35	39/31	11/39
JH3/387	11/41	21/43	28/39	34/35	39/31	11/39

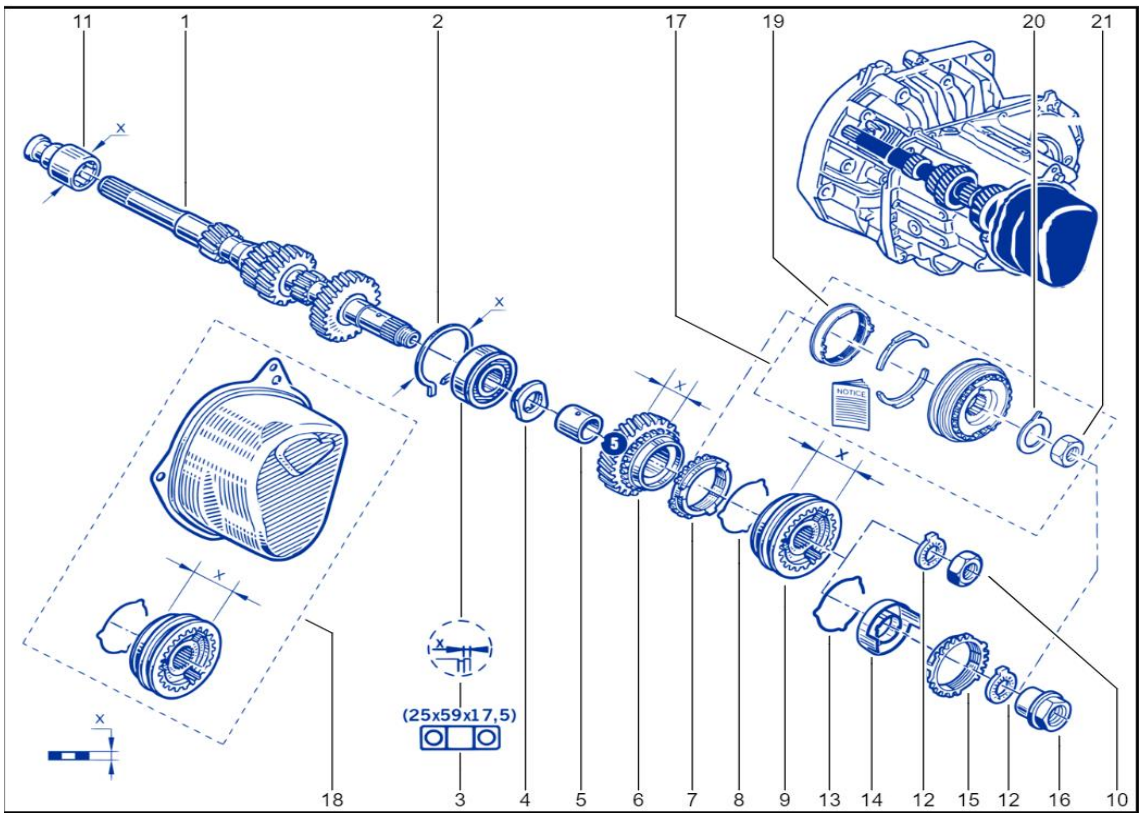

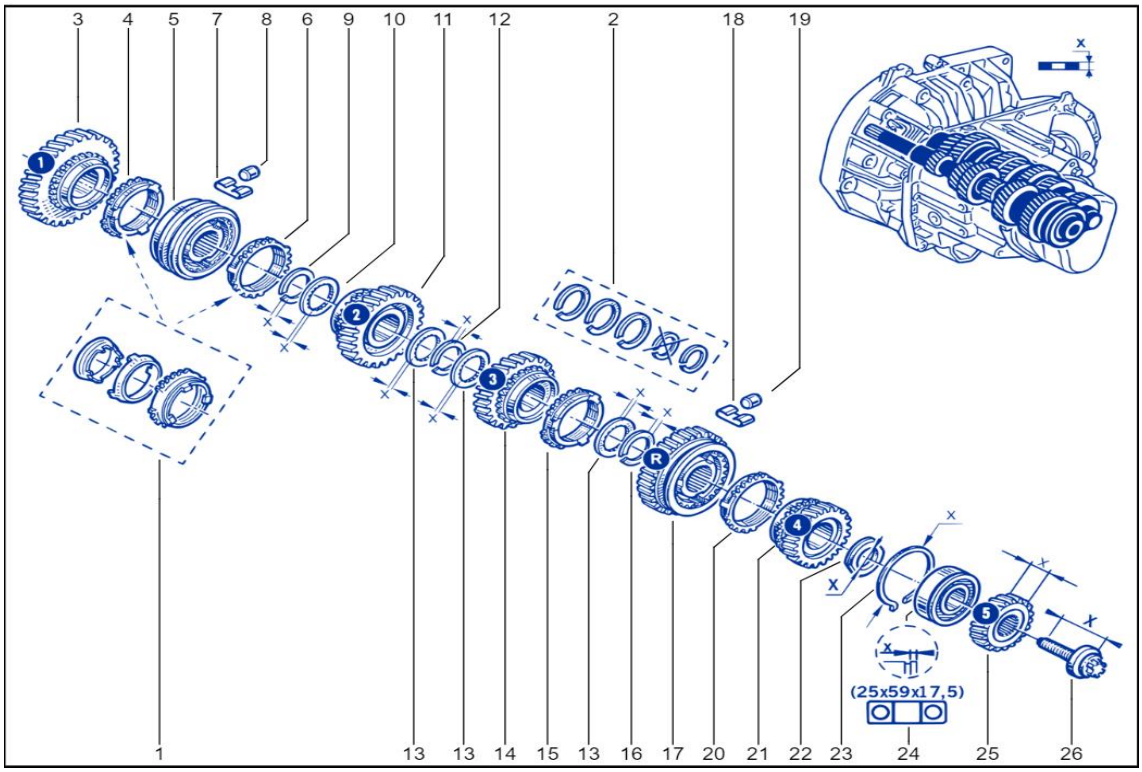
3 4 5 7 8 6 9 10 11 12 2 18 19
1 13 13 14 15 13 16 17 20 21 22 23 24 25 26
(25x59x17,5)

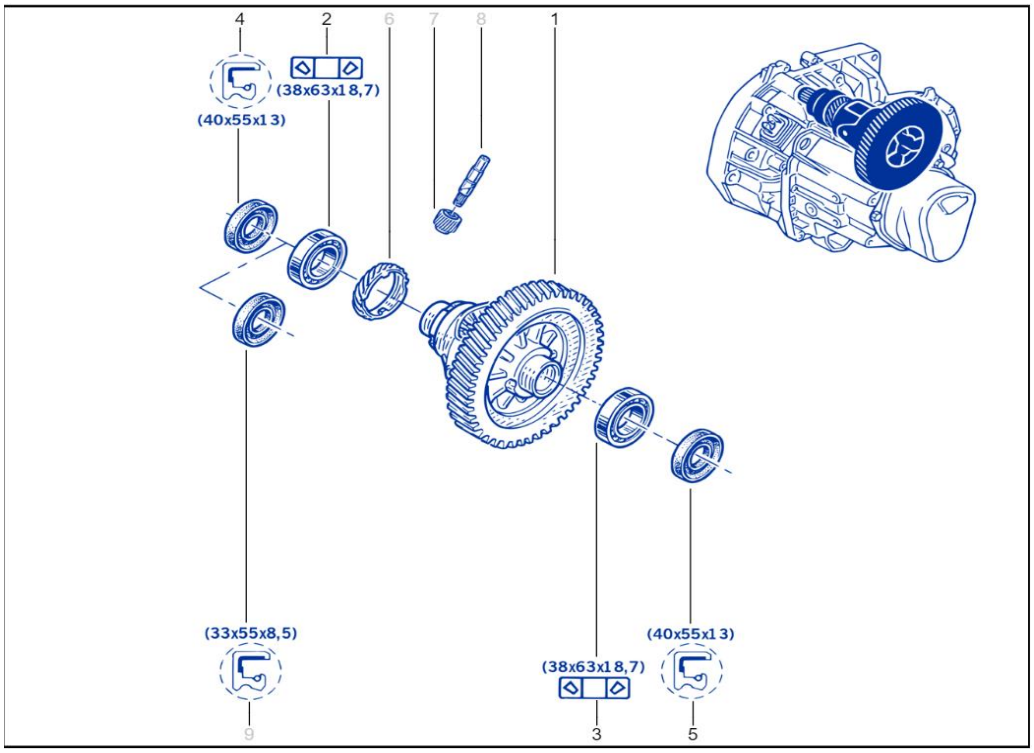
4 2 6 7 8 1
(38x63x18,7)
(40x55x13)
(33x55x8,5)
9
(38x63x18,7)
3
(40x55x13)
5

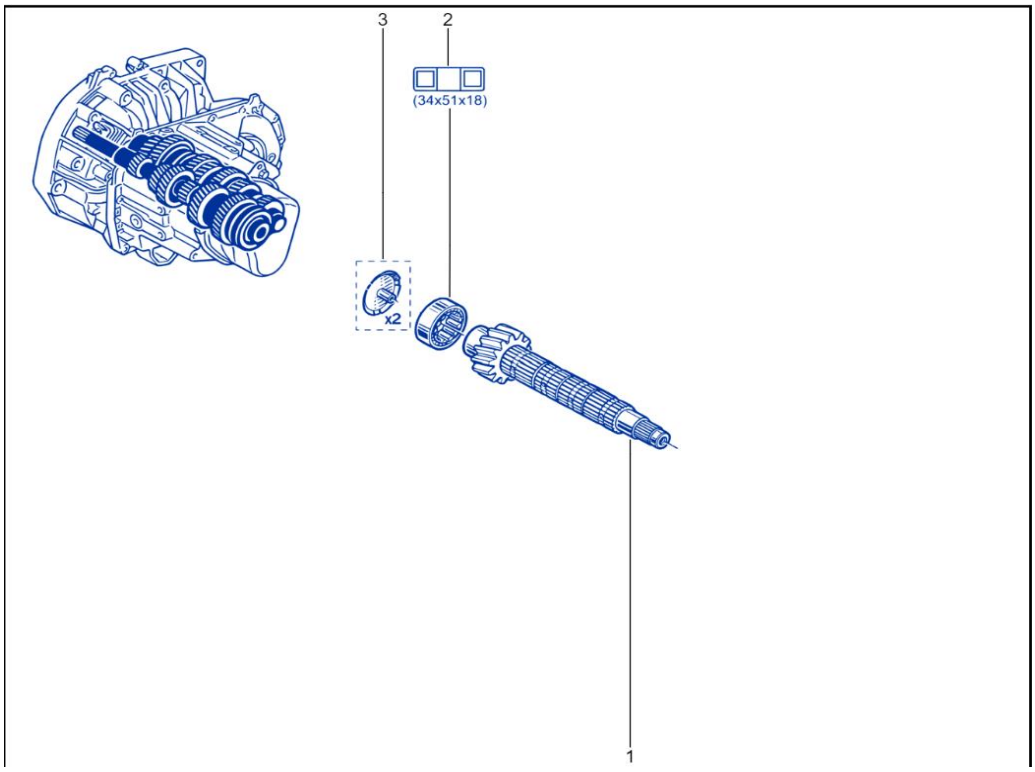
3
2
(34x51x18)
x2
1

← Back

GEARBOX ASSEMBLY : IDENTIFICATION

A marking
(1) on the gearbox casing indicates:

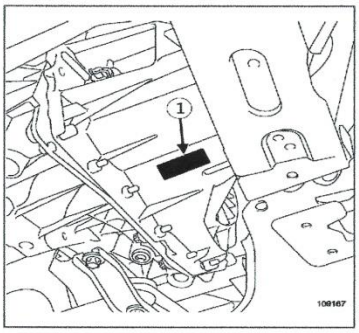

RDE-000172028-01-72-repair-12-01-02-07-3-8-1-000015535

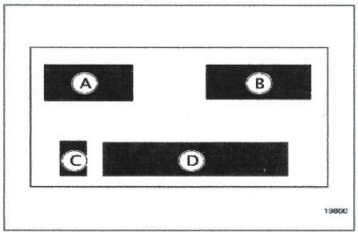

RDE-000172028-01-7-repair-12-01-02-07-3-8-2-000000196

Mark number	Designation
(A)	Gearbox type
(B)	Gearbox suffix
(C)	Production plant
(D)	Production number

Version :

← Back

GEARBOX ASSEMBLY : COMPONENT PARTS LOCATION

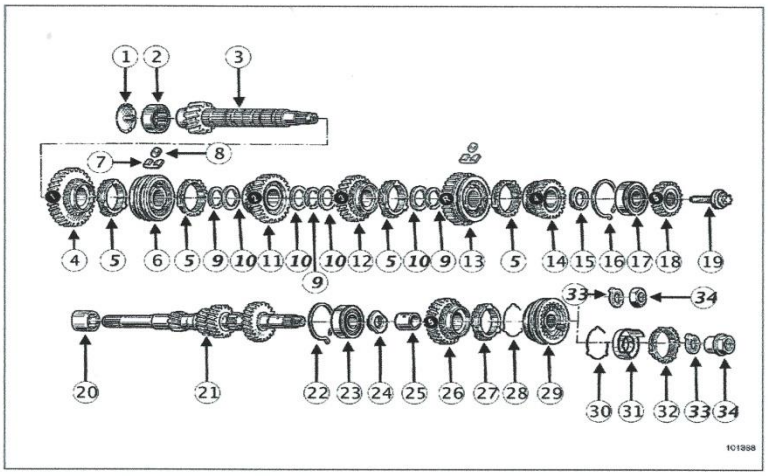

RDE-000171035-01-04-51-repair-12-01-02-51-1-16-8-000001494

Mark number	Designation
(1)	Oil deflector
(2)	Bearing
(3)	Output shaft
(4)	First gear pinion
(5)	Synchromesh ring
(6)	First-second gear synchroniser hub
(7)	Spring
(8)	Roller
(9)	Lock ring
(10)	Splined washer
(11)	Second gear pinion
(12)	Third gear pinion
(13)	Third-fourth gear synchroniser hub
(14)	Fourth gear pinion
(15)	Lock washer
(16)	Retaining clips

(17)	Bearing
(18)	Fifth gear pinion
(19)	Output shaft bolt
(20)	Bearing guide
(21)	Primary shaft
(22)	Retaining clips
(23)	Bearing
(24)	Lock washer
(25)	Sprocket supporting ring
(26)	Fifth gear pinion
(27)	Synchromesh ring
(28)	Spring
(29)	Synchroniser hub
(30)	Spring
(31)	Friction cone
(32)	Synchromesh ring
(33)	Washer
(34)	Input shaft nut

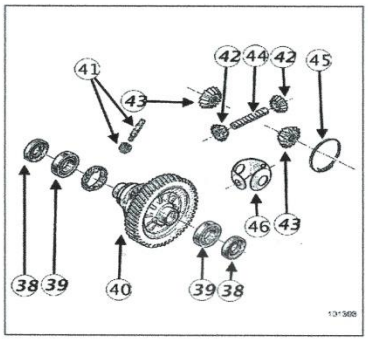

RDE-000171035-01-04-56-repair-12-01-02-51-1-16-3-000001499

Mark number	Designation
(38)	Differential seal
(39)	Bearing
(40)	Differential
(41)	Tachometer sprocket (if fitted to the vehicle)
(42)	Satellite

(43)	Sunwheel
(44)	Axis
(45)	Shaft retaining spring
(46)	Friction cover

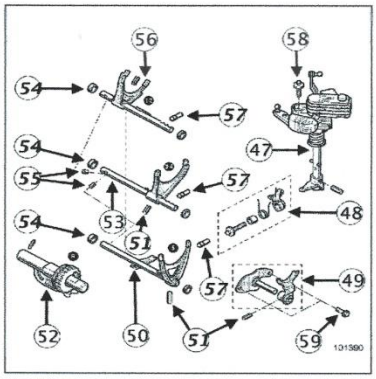

RDE-000171035-01-04-53-repair-12-01-02-51-1-16-7-000001496

Mark number	Designation
(47)	Selector shaft
(48)	Gear shift catch
(49)	Reverse gear brake fork and shaft
(50)	Fifth gear fork and shaft
(51)	Peg
(52)	Reverse gear shaft
(53)	Third-fourth gear fork and shaft
(54)	Ring
(55)	Lock shaft
(56)	First-second gear fork and shaft
(57)	Retaining locating ball cartridge
(58)	Selector shaft bolt
(59)	Reverse gear fork shaft bolt

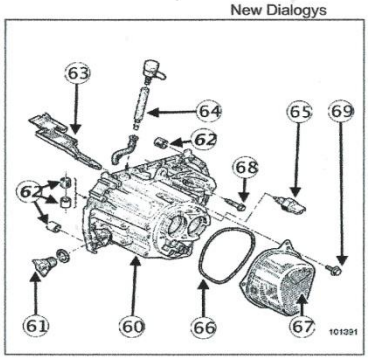

RDE-000171035-01-04-54-repair-12-01-02-51-1-16-5-000001497

Mark number	Designation
(60)	Mechanism housing
(61)	Filler plug
(62)	Spacer
(63)	Oil channel
(64)	Breather pipe
(65)	Reverse gear sensor
(66)	O-ring seal
(67)	Fifth gear housing
(68)	Gearbox bell housing bolt
(69)	Fifth gear housing bolt

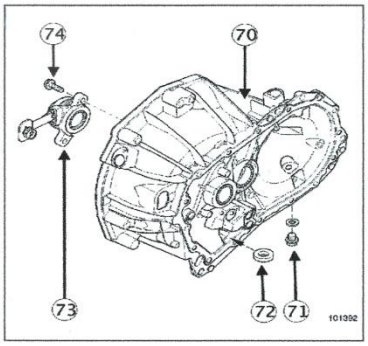

RDE-000171035-01-04-55-repair-12-01-02-51-1-16-6-000001498

Mark number	Designation
(70)	Clutch housing
(71)	Drain plug
(72)	Magnet
(73)	Hydraulic clutch release bearing

18/

OMP Approved Multi-Point Roll Cage	**(Bolt In Cage Only Dacia Sandero)**
Sparco Circuit Seats x 2	**(with Head Restraint)**
FIA Seat Side Mounting Kits	**(x 2 Pairs 35mm tube)**
Seat Frames Steel	**(X 2)**
Sabelt 6 Point Harness	**(Hans Compatible x 2)**
Bilstein B8 Front Performance Damper	**(x 2)**
Bilstein B6 Rear Performance Damper	**(x 2)**
Lifeline Zero 2020 Fire extinguisher system	**(Plumbed In Type, Mechanical)**
Lifeline 2.4 Hand Held extinguisher	**(Hand Held X 1 + Clips/Brackets)**
Electrical Isolation System	**(Pull Cord Type,+ Cut Off/Fire Extinguisher Stickers)**
Bonnet/boot pins	**(x 2 Pairs)**
Harness Cutters	**(x 2)**
Side Window Security Film Kit	
Sump guard	**(4mm Alloy)**
Fuel tank guard	**(2mm Steel)**
Helmet Holders/Netting	
Sparco Spare Wheel Tie Down Strap Kit/ Tow Eye Straps/Hooks	**(x 2)**

Safety vests **(x2)** / Red Warning Triangle **(x1)**

Avanti Co-Driver LED Map Reading Light

CL Front Brake Pads EBC Bluestuff Compound **(x 1 Set)**

Rear Brake Shoes - EBC (p/n 6612) or LPR (p/n 08150, 08630 or 09890)

Braided Flexible Brake Hoses inc ABS bypass

CBF Brake Bias Valve **(Screw Type)**

Sparco R375 Steering Wheel with Boss Option

Motul RBF 660 Factory Line Competition Brake Fluid 500ml

Driver & Navigator GRP Footrests

OK/SOS Board

Tow Rope **(16mm x 4m)**

First Aid Kit

Fuel Testing Point + Hose **(Dry Break Coupling Kit)**

Powerflex Wishbone Bushing Kit

Mudflaps **(Flexible Material min. 4mm thick, extending min. 40mm each side Of tyre thread on each wheel and within 80mm off ground when Car is Stationary)**

Roll Cage Padding

Fuel Line Rerouting Kit

Mandatory Championship Decals

Technical Specifications

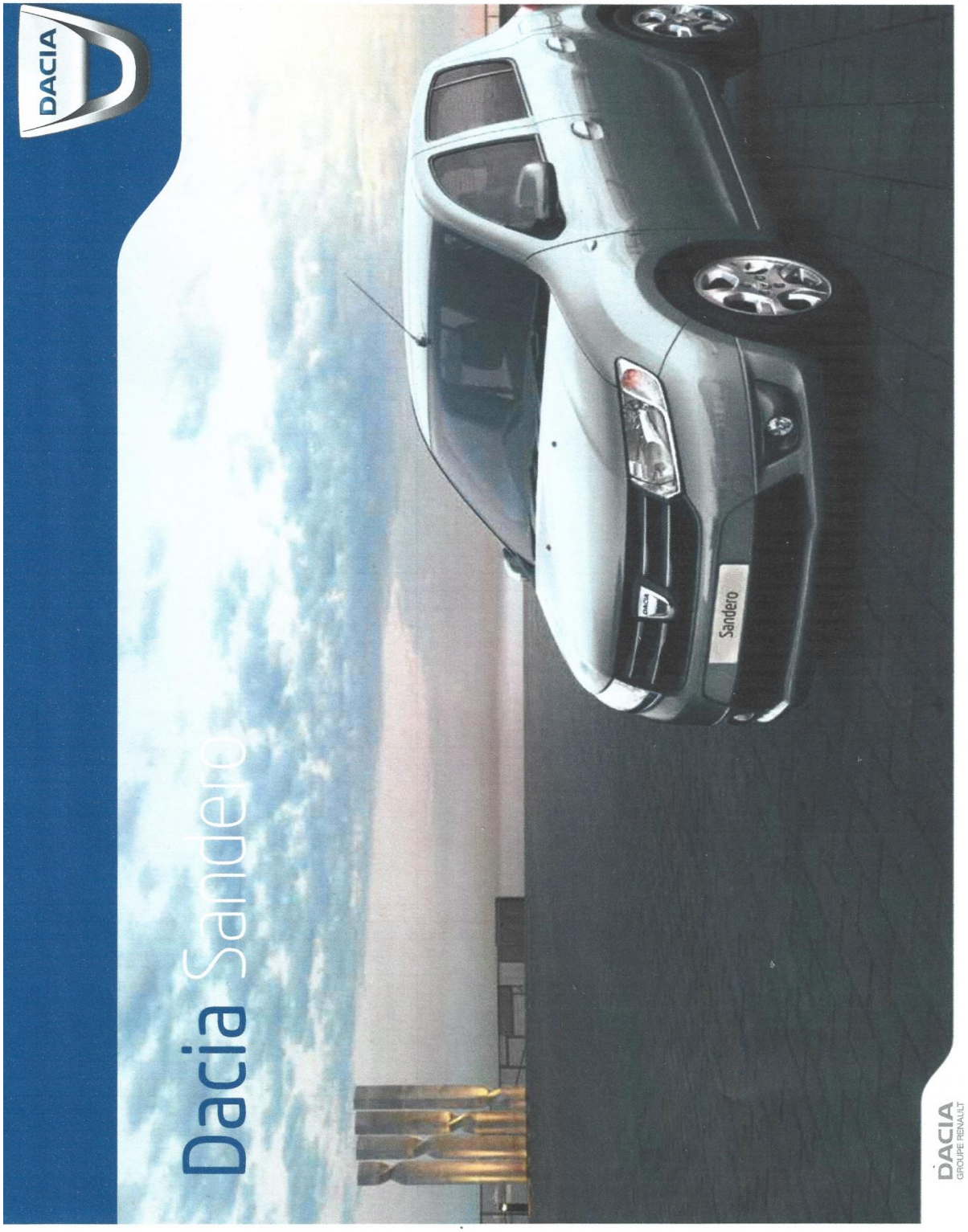

Colours

SOLID METALLIC

Glacier White (369)

Cinder Red (B76)

Mercury (D69)

Pearl Black (676)

Slate Grey (KNA)

Chestnut (CNG)

Cosmos Blue (RPR)

Colour Code	Commercial Name	Access	Ambiance	Ambiance Prime	Lauréate
SOLID					
369	Glacier White	●	●	O FOC	●
METALLIC					
B76	Cinder Red	-	O	O	O
D69	Mercury	-	O	O	O
676	Pearl Black	-	O	O	O
KNA	Slate Grey	-	O	O	O
CNG	Chestnut	-	-	●	-
RPR	Cosmos Blue	-	O	O	O

Wheels

15" 'Gobi' steel wheels

15" 'Colorado' wheel trims

15" 'Aquila' alloy wheels

15" 'Sahara' alloy wheels

	Access	Ambiance	Ambiance Prime	Lauréate
15" 'Gobi' steel wheels	●	-	-	-
15" 'Colorado' wheel trims	-	●	-	-
15" 'Aquila' alloy wheels	-	-	●	-
15" 'Sahara' alloy wheels	-	O	-	●

● = Standard O = Optional - = Not available FOC = Free of Charge option

Interiors and Upholstery

ACCESS

Black 'Element' cloth upholstery

AMBIANCE / AMBIANCE PRIME

Two tone 'Atom' cloth upholstery

LAUREATE

Dark carbon 'Quantum' cloth upholstery

Technical Specifications

		1.2 16v 75
ENGINE	Engine type	D4F 732
	Cubic capacity (cm³)	1,149
	Number of cylinders/valves	4 in line / 16
	Fuel	Unleaded petrol
	Fuel injection type	Multipoint sequential
	Aspiration	Naturally-aspirated
	Particulate filter (PF)	-
	Bore x Stroke (mm)	69.0 x 76.8
	Compression ratio	9.8
	Peak power KW (HP) @ RPM	54 (73) @ 5,500
	Peak torque (Nm) @ RPM	107 @ 4,250
	Stop and Start	No
PERFORMANCE	Maximum Speed mph (km/h)	101(162)
	0- 62 mph - secs (0-100 km/h)	14.5
	0 - 400m (secs)	19.6
	0 - 1000m (secs)	36.1
FUEL CONSUMPTION* AND EMISSIONS	CO_2 (g/km)	130
	Urban cycle - mpg (l/100 km)	38 (7.4)
	Extra-urban cycle - mpg (l/100km)	57.7 (4.9)
	Combined cycle - mpg (l/100km)	48.7 (5.8)
GEARBOX	Drive type	Front-wheel drive
	Gearbox type/index	JH3/359
	Number of forward gears	5
	Vehicle speeds (mph) per 1000 rpm: in 1st gear	4.21
	Vehicle speeds (mph) per 1000 rpm: in 2nd gear	7.66
	Vehicle speeds (mph) per 1000 rpm: in 3rd gear	11.27
	Vehicle speeds (mph) per 1000 rpm: in 4th gear	15.24
	Vehicle speeds (mph) per 1000 rpm: in 5th gear	20.75
STEERING	Steering type	Power-assisted (Hydraulic)
	Turning circle between pavements / walls (m)	10.82
	Number of turns (lock-to-lock)	3.2
SUSPENSION	Front suspension type	Pseudo McPherson with triangular arm
	Rear suspension type	Flexible axle with programmed deflection and coil springs
WHEELS / TYRES	Wheel size	6J15
	Tyre specification	185 / 65 / R15 88T
BRAKING	Front: - diameter (mm) / thickness (mm)	258 / 22
	Rear: - diameter (inches)	8
	Anti-lock Braking System (ABS)	Standard
	Electronic Brakeforce Distribution (EBD)	Standard
	Emergency Brake Assist (EBA)	Standard
	ESC (Electronic Stability Control)	Standard
FUEL TANK CAPACITY	Fuel tank capacity (litres)	50
WEIGHT	Kerb Weight (Excluding Driver) (kg)	941
	Unladen weight on front axle (kg)	572
	Unladen weight on rear axle (kg)	369
	Gross vehicle weight (kg)	1,500
	Gross train weight (kg)	2,250
	Max payload (kg)	559
TOWING CAPACITY	Max braked trailer (within gross train weight limit) (kg)	1,100
	Max unbraked trailer (kg)	505

* Official Fuel consumption figures are produced for comparison purpose and are measured according to the European Directive 80/1268/EEC. These figures are specific for a vehicle type and not for a single car. Real world fuel (actual) consumption can vary as the fuel efficiency of a vehicle is influenced by driving behaviour, weather and road conditions. The use of technical equipment for example air conditioning, can also effect the fuel consumption. For further information, please visit the Vehicle Certification Agency web site www.vca.gov.uk.

Dimensions

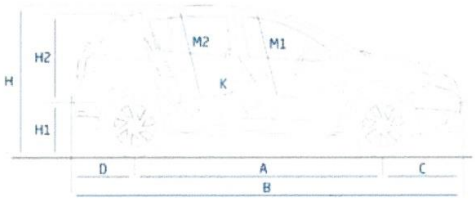

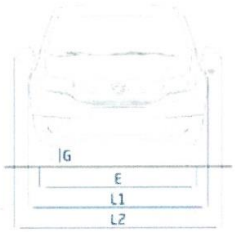

EXTERIOR DIMENSIONS (mm)	
A - Wheelbase	2,589
B - Overall bodywork length	4,058
C - Front overhang	813
D - Rear overhang	656
E - Front track	1,493
F - Rear track	1,476
G - Ground clearance	148
H - Unladen height	1,518
H1 - Unladen sill height	761
H2 - Rear tailgate height	622
Unladen height with hatchback open	2,004
J1 - Front shoulder width	1,387
J2 - Rear shoulder width	1,393
K - Rear knee room	144
L1 - Overall width without door mirrors	1,733
L2 - Overall width with door mirrors	1,994
L3 - Interior width between wheel arches	1,005
M1 - Distance between hip joint and ceiling in front seats	900
M2 - Distance between hip joint and ceiling in rear seats	880
O1 - Front elbow room	1,417
O2 - Rear elbow room	1,436
Y1 - Loading lenght, rear seat in place	856
Height beneath parcel shelf	469
BOOT VOLUME	
Maximum boot capacity with rear seats in place (litres)	320
Maximum load capacity with rear seats folded down (litres)	1,200

Championship Contacts

Championship Manager

Declan O'Keeffe

Phone: 086 388 2595

Email: sandero.challenge.cup.manager@gmail.com

Championship Registrar

Carrie Ryan

Phone: 087 749 9736

Email: registrar.sanderochallengecup@gmail.com

Championship Scrutineer

David Forde

Phone: 087 271 4886